PILOT CRUSHTEC®

CRUSHING AFRICA'S ROCK

TRACKED DOUBLE-ROLL CRUSHER

DOPPIATRAC

DR400

CRUSHING

DOPPIA TRAC® double roll crusher

TRACKED DOUBLE-ROLL CRUSHER

DOPPIATRAC DR400

The Pilot Crushtec DoppiaTrac DR400 is a track mounted, self-powered, single-stage double-roll crushing, sizing and stockpiling machine. The DR400 is the world's only mass-produced, fully mobile double-roll crusher.

Key Benefits:

- Guaranteed product sizing in one pass as small as 35mm without the need for post screening
- Feed size up to 180mm
- Fully site mobile with a quick set up time
- Unique crushing action which minimises fines generation
- Can work independently with loaders or interlocked as part of a crushing train with upstream and downstream communication
- Highly efficient, latest generation Volvo engine
- Effective crushing method that consumes low kilowatts per ton produced
- Low transport weight and compact transport dimensions
- Designed and manufactured to suite mining conditions
- Fully guarded with all the latest safety features.

Machine weight - 27,000 kg
standard machine configuration

DOPPIATRAC DR400

Hopper and Belt Feeder

- Heavy-duty belt feed hopper, approximately 6m³ capacity
- Low level drop down rear feed flap
- Can be side fed by a front-end loader and rear fed by a primary mobile crusher
- Class 630/4 ply belt 5mm top cover, 1.6mm bottom cover
- Heavy-duty pre-tensioned belt scraper with replaceable scraper blades.

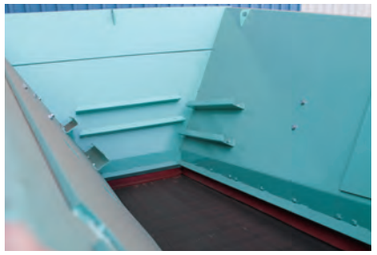

Crusher Unit

- 915mm x 915mm Double roll crusher (36” x 36”)
- Various drum segment options available dependent on applications and feed size
- Replaceable drum segments
- Spring back drum mechanism for tramp release.

Electrical System

- 24VDC Electrical system
- Simple and intuitive control panel
- Critical information readily available on display panel
- Failsafe emergency stop circuit.

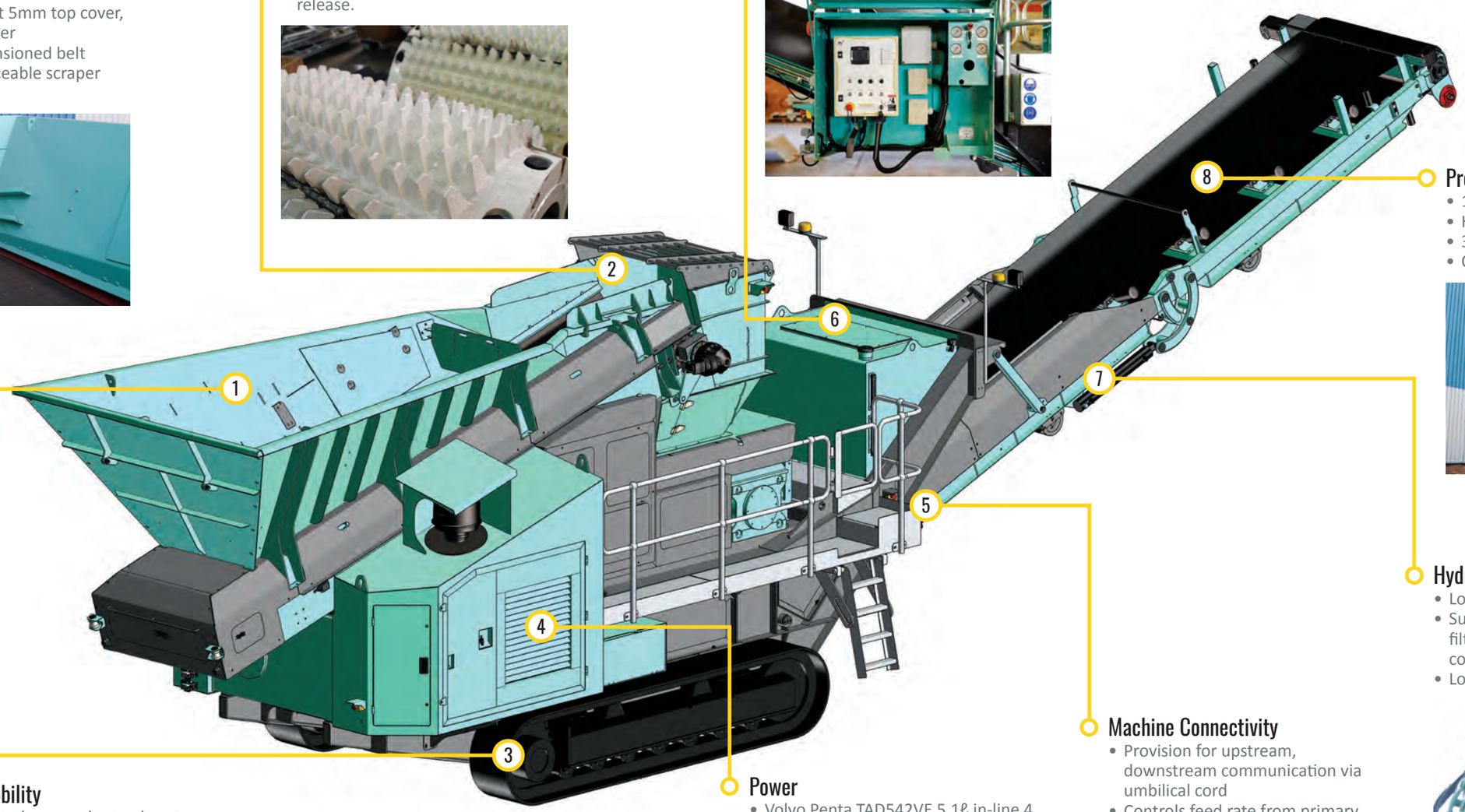

Product Conveyor

- 1.2m wide flat belting
- Hydraulic folding for transport
- 3.7m stockpile height
- Class 500/3 Ply belt.

Hydraulics

- Load sensing system for fuel saving
- Suction, pressure and return line filtration integration with the control panel
- Low hydraulic oil level protection.

Site Mobility

- Mounted on crawler track system
- Radio remote control for tracking
- Optional pendant control box for tracking.

Power

- Volvo Penta TAD542VE 5.1ℓ in-line 4 cylinder producing 160kW @ 2,200rpm
- Electronic engine monitoring and protection system
- Highly fuel efficient engine
- Heavy-duty self-cleaning engine air intake filter system
- Diesel tank capacity sufficient for more than 45hrs of continuous operation
- Heavy-duty water separator in the engine fuel system.

Machine Connectivity

- Provision for upstream, downstream communication via umbilical cord
- Controls feed rate from primary crusher.

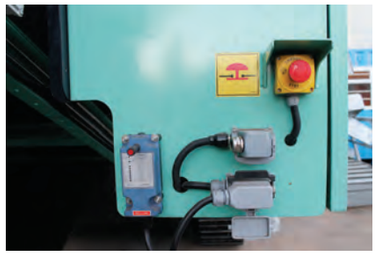

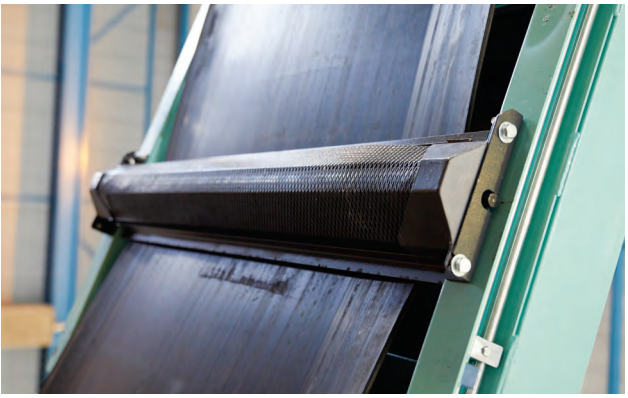

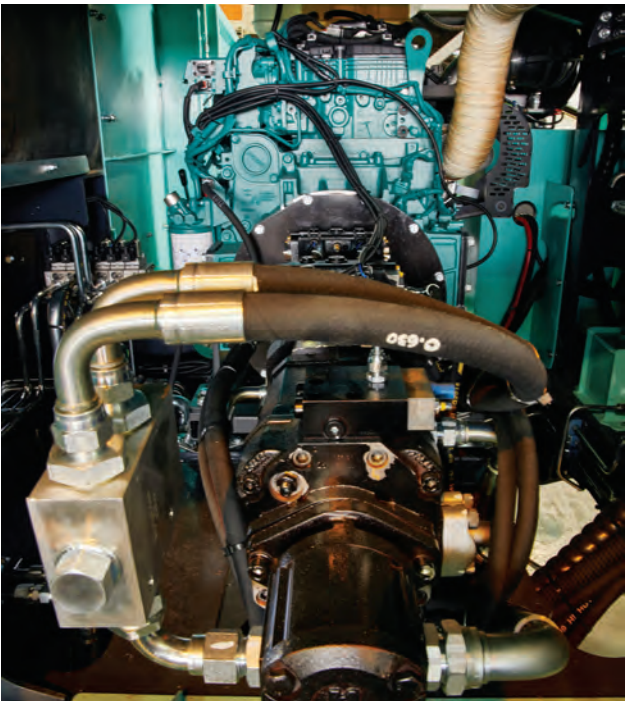

Safety First

Through thousands of hours of in-field experience, the DR400 has been influenced with a safety-focused design. Full guarding around all access points, nip points and crushing points minimises the possibility of injury. Safety pull cords around the machine's conveyors and five emergency-stop buttons strategically located around the DR400, ensure that this unit is quick to isolate at the first sign of an emergency.

The DR400 also has a mandatory sequential start-up sequence, with audible warnings prior to the start of each function, providing a clear warning sound to all personnel that may be within an unsafe radius.

Drive for Efficiency

We have selected Volvo Engines to bring you the latest generation 5.1ℓ Penta engine, with the extremely efficient EMS 2.3 Engine Management System. Volvo's world-famous efficiency combines with our constant drive for higher throughput per kW, to give you the lowest kW/ton of any mobile double-roll crusher currently working in coal. This delivers maximum operational efficiency with our reported figures reflecting an output of 160kW @ *400tph = 0.4kW/ton.

*Dependant on coal characteristics.

Tailored Crushing Action

When it comes to fines minimisation, there is no better crushing solution than a double-roll crusher. Unlike an impactor, which creates a high amount of fines due to the high energy released through impact, the roll crusher forces material through a constantly maintained gap, which uses only enough energy to crush the material down to the size of the gap. When running at the intended 300-400 tons per hour, efficiency is even further improved as the material is fed into the crushing chamber at the exact same speed that the drums are spinning, minimising attrition and friction.

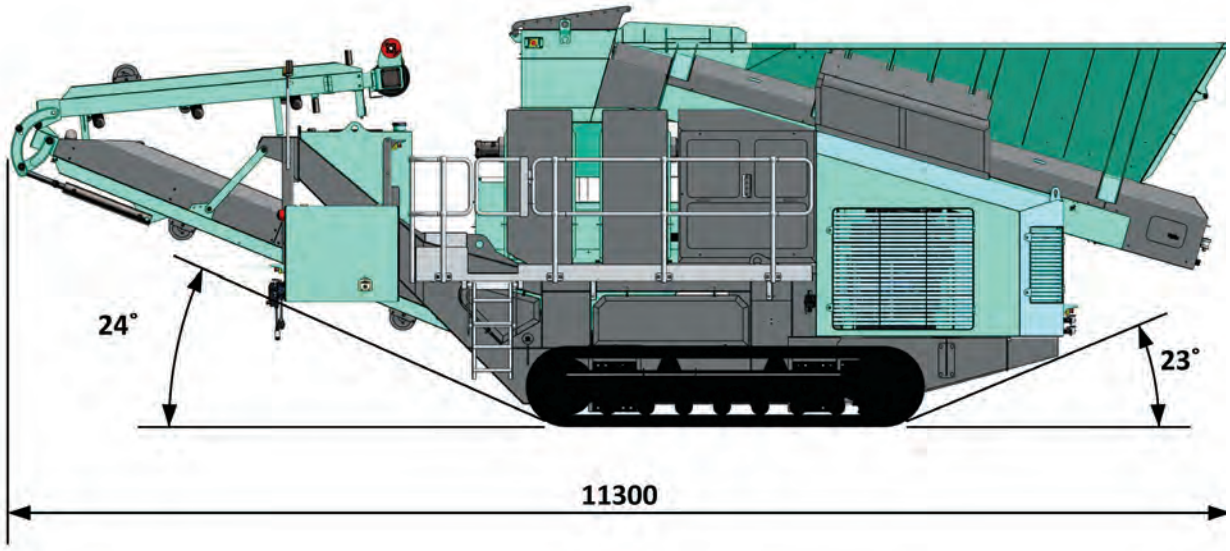

TRACKED DOUBLE-ROLL CRUSHER

DOPPIATRAC DR400

Coal Crushing - Ermelo, Mpumalanga

Two DoppiaTrac DR400 machines were sold to a customer in Ermelo, South Africa and are currently crushing side by side, producing in excess of 4,500 tonnes per day. ROM is fed to a jaw crusher by a front end loader. The closed side settings (CSS) on the jaw crusher is set to 120mm. The CSS on the DR400 is set to 35mm. The crushed material from the jaw crusher is discharged into the hopper of the DR400 and crushed down to -40mm in one pass and with minimal fines. Discharge material from the DoppiaTrac DR400 is stockpiled for sale.

The DoppiaTrac DR400 is a mechanical-hydraulically driven machine and fitted with a Volvo engine. It is a self-driven mobile crusher capable of producing up to 400t/h. The crushing chamber incorporates both a fixed and sliding drum. The slide drum is used for CSS and has a heavy-duty release system built in for tramp relief. The discharge conveyor is fitted with a 1.2m wide belt. The DoppiaTrac DR400 has a 6m^3 load bin and machine total weight is 27,000kg. The DoppiaTrac DR400 incorporates a simple relay logic electrical control philosophy (no PLC) with the ability to reverse the drums to clear any blockage.

The two DoppiaTrac DR400 crushers on site have combined operating hours of 8,285 hours with an average fuel consumption of 15-25ℓ/h. “I’m very pleased with the minimal downtime from these machines compared to other crushers on the market” commented the site manager. “At the current rate, I estimate the wear segments to have a life span of at least 650,000 tons, if not more.”

PILOT CRUSHTEC®

CRUSHING AFRICA’S ROCK

DOPPIA TRAC double roll crusher

www.pilotcrushtec.com | sales@pilotcrushtec.com | +27 11 842 5600

All reasonable steps have been taken to ensure the accuracy of the publication, however, due to Pilot Crushtec International’s policy of continual product development, we reserve the right to make changes in specifications shown herein or improvements at any time without notice or obligation. All capacities and feed sizes are provided as an application aid only. No warranties are expressed or implied.